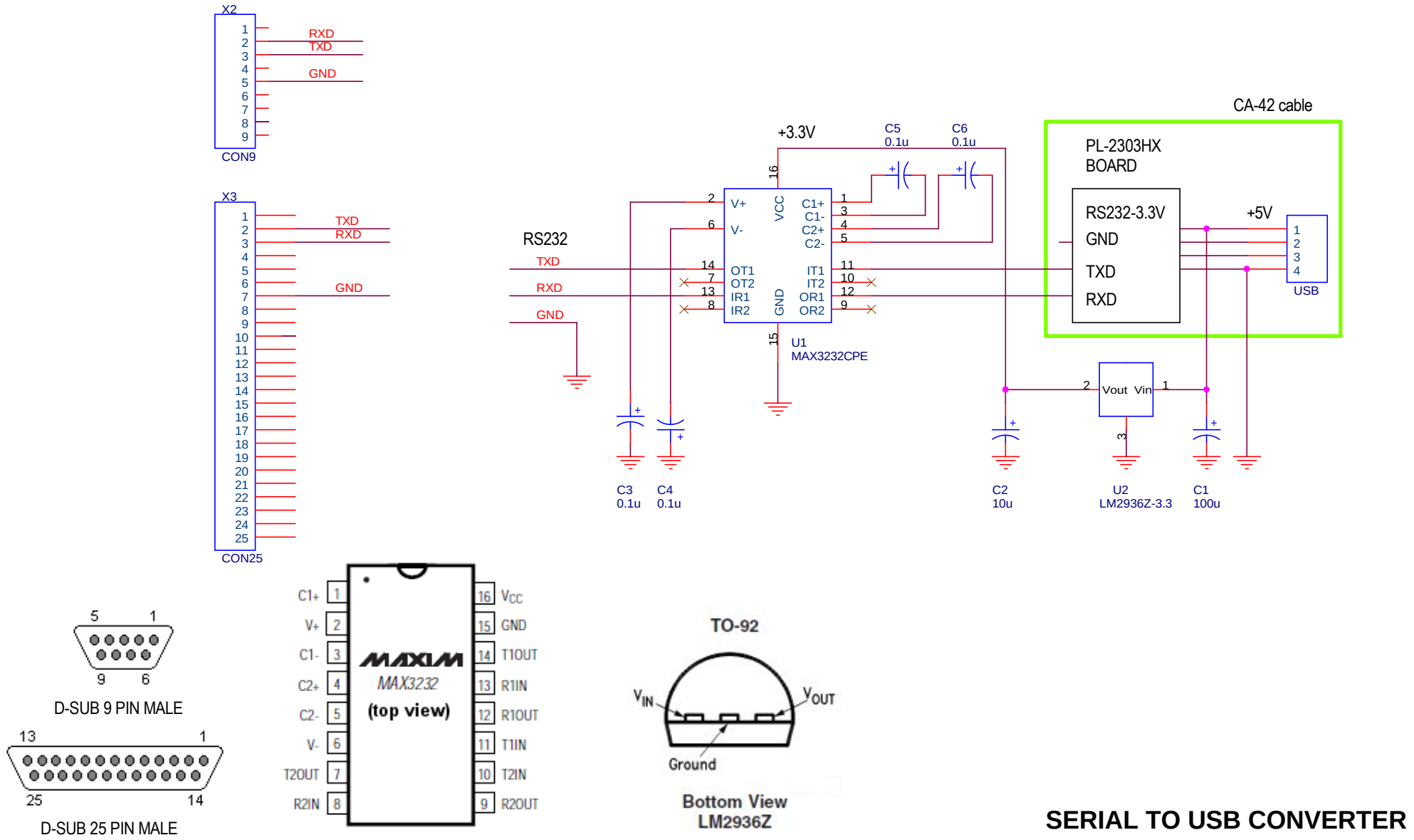

SERIAL TO USB CONVERTER