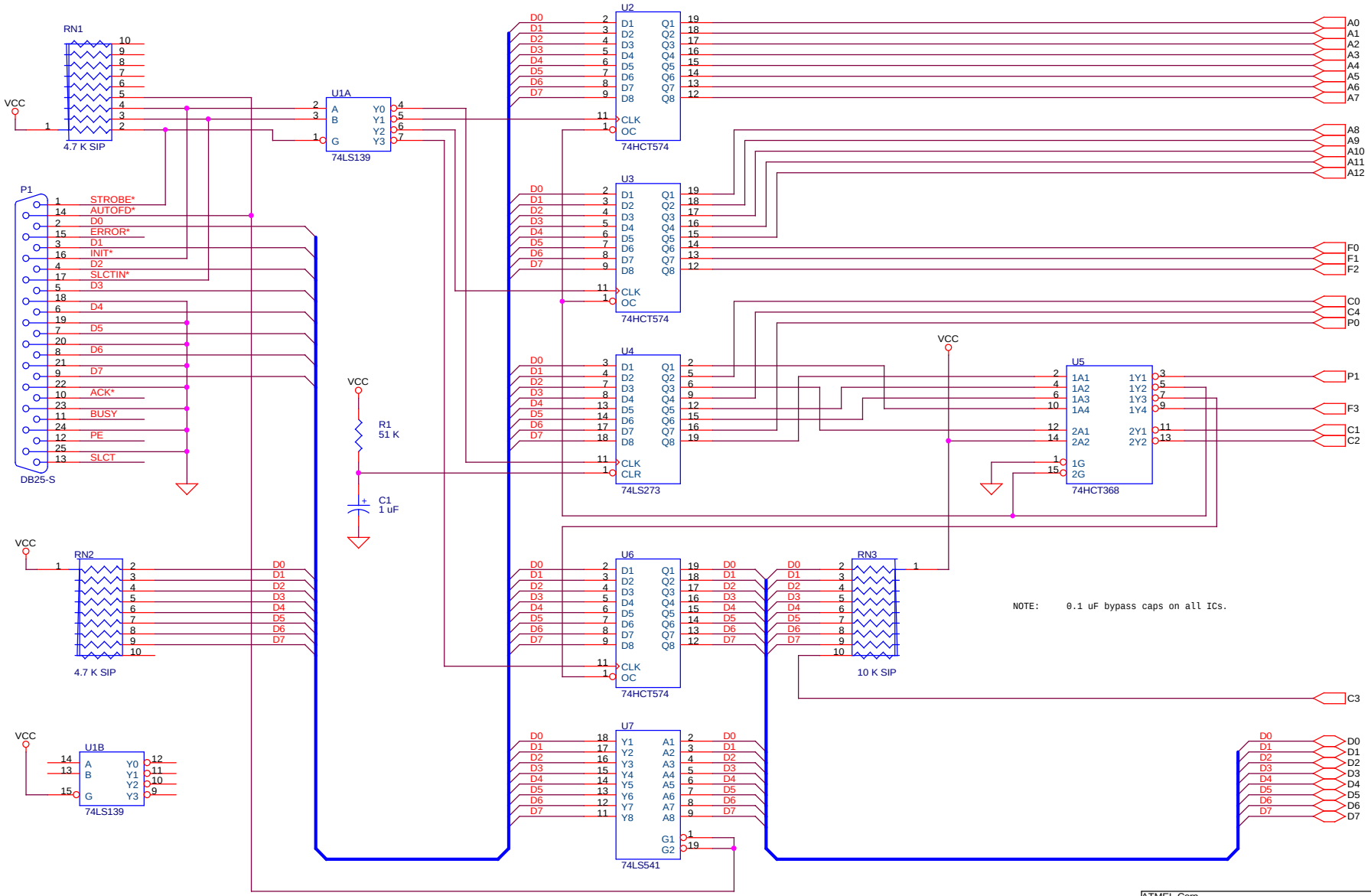

NOTE: 0.1 uF bypass caps on all ICs.

ATMEL Corp.	
Title	AT89C51/C52/C1051/C2051/S8252 Programmer
Size	Document Number	Rev D
Date:	Sheet 1 of 3