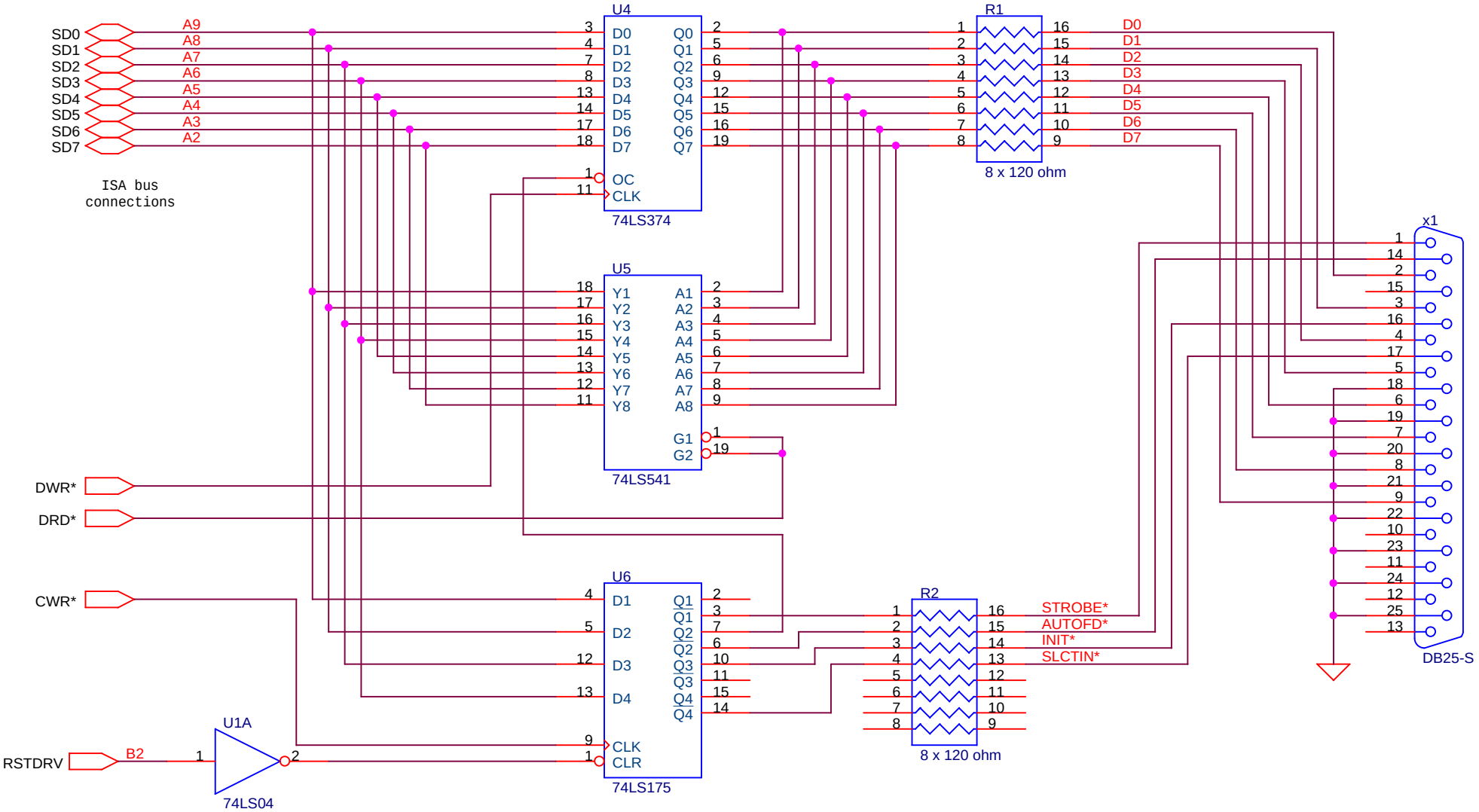

NOTE: 0.1 uF bypass caps on all ICs.

Title	Parallel Interface	
Size	Document Number	Rev A
Date:	Sheet 2 of 2	